At a Glance

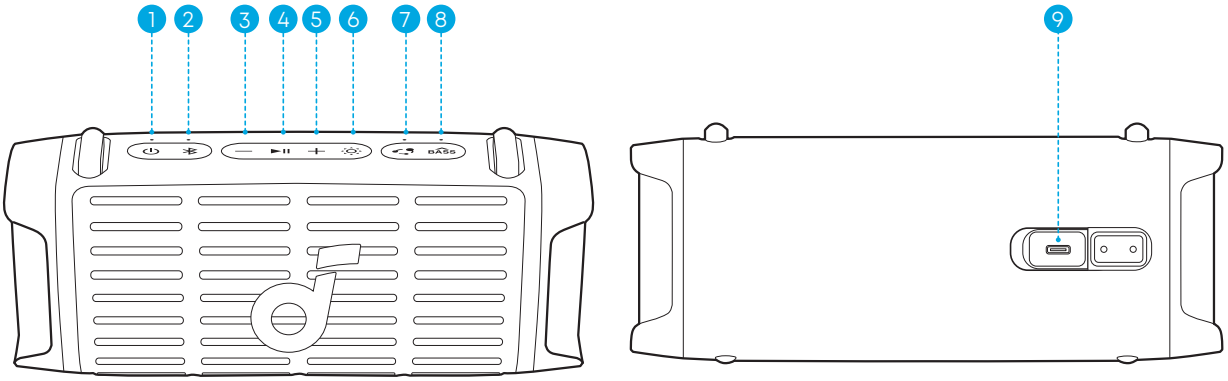

1	Power Button	7	PartyCast Button
2	Bluetooth Button	8	BassUp Button
3	Volume Down Button	9	USB-C Charging Port
4	Play / Pause Button		
5	Volume Up Button		
6	Light Show Button		

Installing the Strap

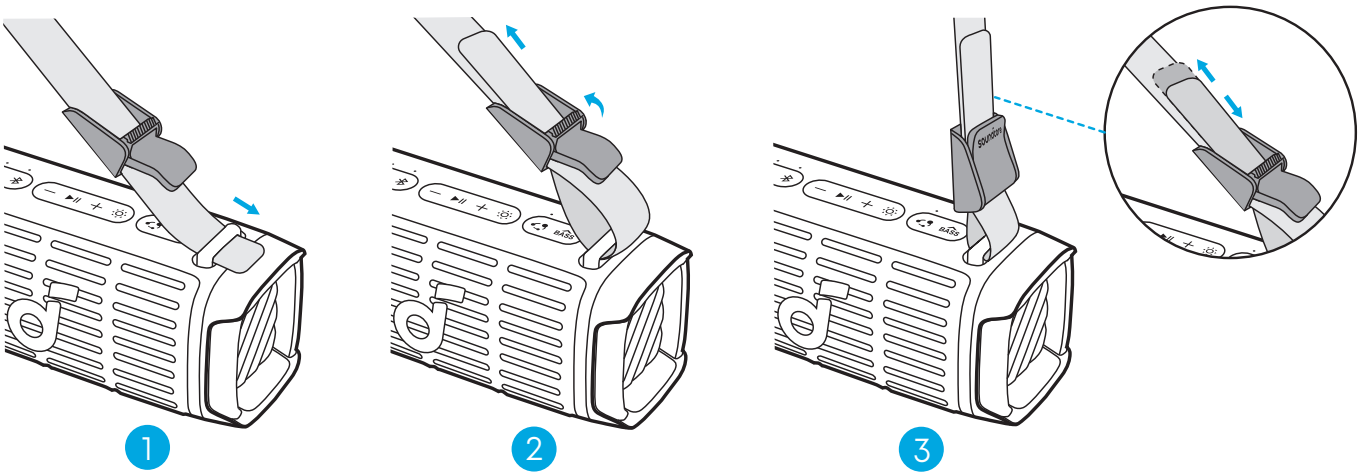

Attach the strap to both sides of the speaker. Adjust the strap length according to the illustration for optimal comfort.

Charging Your Speaker

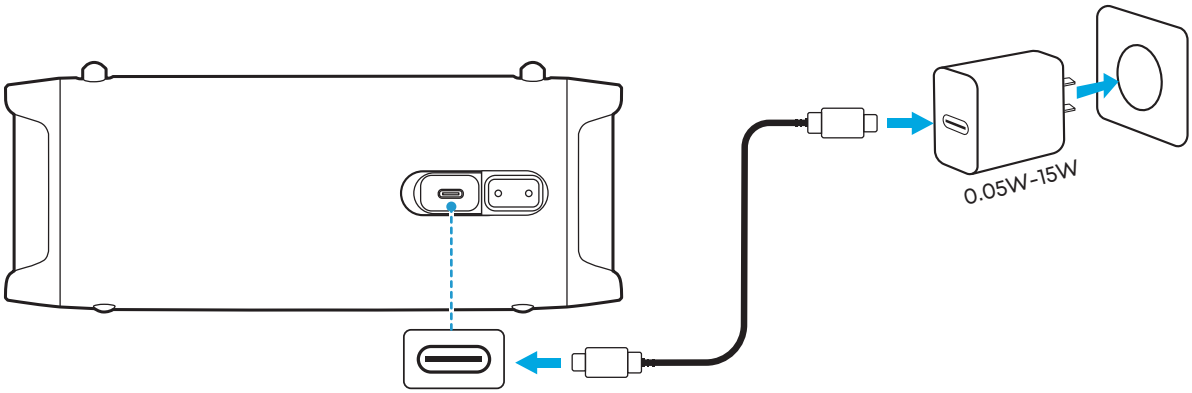

Use the provided USB-C to USB-C cable to connect the speaker and a certified charger to a power source.

	Flashing Red	Low Battery
●	Steady Red	Being Charged
○	Steady White	Fully Charged

- Please use a charger with a power output of 0.05W to 15W to charge the speaker.

Powering On / Off

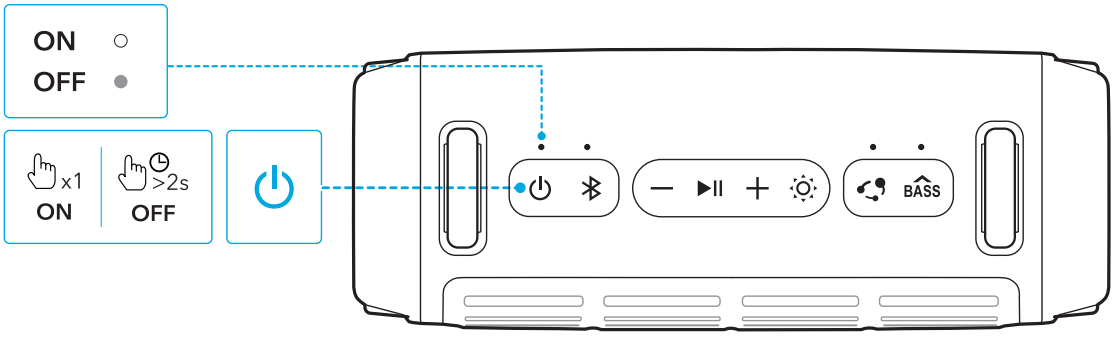

⏻	Press Once	Power On
○	Steady White	
⏻	Press and Hold for 2 Seconds	Power Off
●	Light Off	

- This speaker will power off automatically after 20 minutes if no device is connected.
- You can customize the auto power off time in the soundcore app.

Using Your Speaker

Bluetooth Mode

Press the Bluetooth button to enter Bluetooth pairing mode, then select "**soundcore Boom 3i**" from the Bluetooth list to connect.

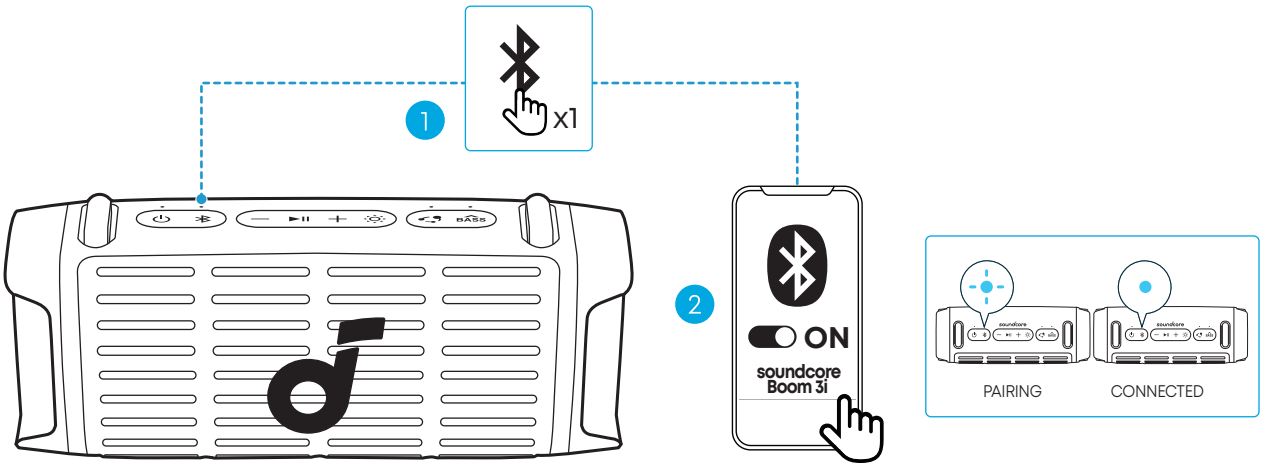

	Press	Enter / Exit Bluetooth Pairing Mode
	Flashing Blue	Bluetooth Pairing
	Steady Blue	Bluetooth Connected

- If the speaker is not connected to a device within 3 minutes after being powered on, it will automatically exit Bluetooth pairing mode.
- To re-enter Bluetooth pairing mode, press the Bluetooth button once.
- This speaker can only play music on one mobile device at a time. If another connected device starts playing music, the speaker will automatically take over and interrupt the current playback without requiring the first device to pause.
- Each time you power on your speaker, it will automatically connect to your last connected device if available within the Bluetooth range. If not, press the Bluetooth button to enter Bluetooth pairing mode.

True Wireless Stereo (TWS) Mode

Two identical soundcore speakers can pair with each other for stereo sound. Both speakers can play the same audio (one as the left channel and the other as the right channel).

With one speaker connected to a smartphone, press and hold the Bluetooth button for 2 seconds on two speakers to enter TWS pairing mode.

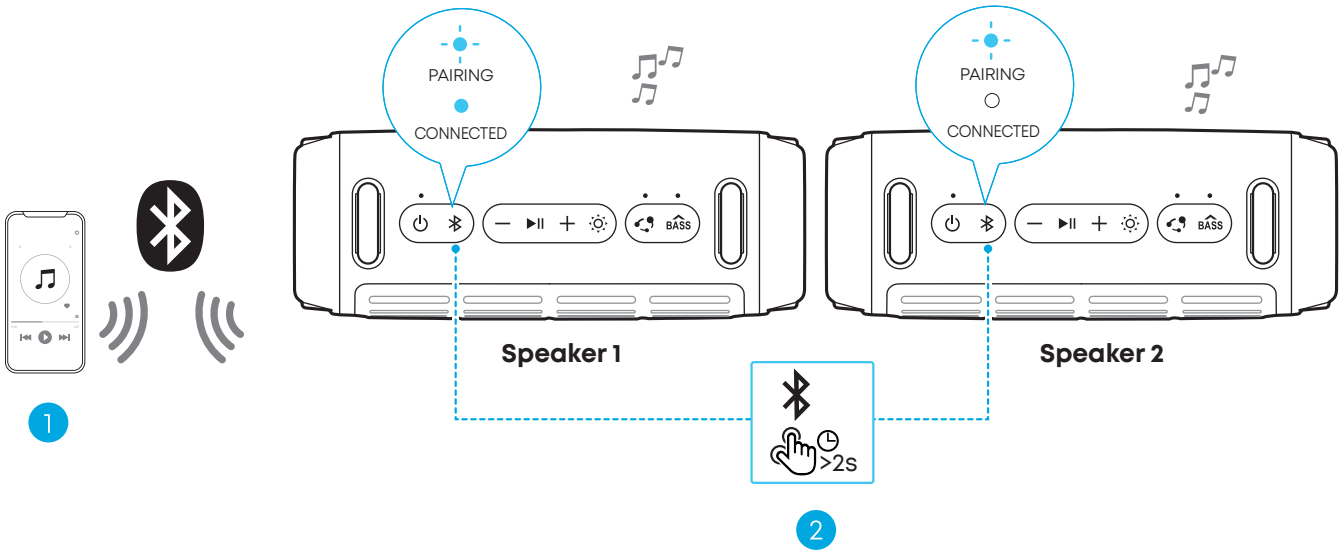

	Press and Hold for 2 Seconds	Enter TWS Pairing Mode
	Flashing White	TWS Pairing
●	Steady Blue (Speaker 1)	TWS Connected
○	Steady White (Speaker 2)	

PartyCast Mode

With one speaker connected to a smartphone, simultaneously press the PartyCast button on multiple soundcore speakers with PartyCast function to synchronize audio and light.

A prompt sound will play when you enable or disable PartyCast mode, or when multiple speakers are successfully linked together.

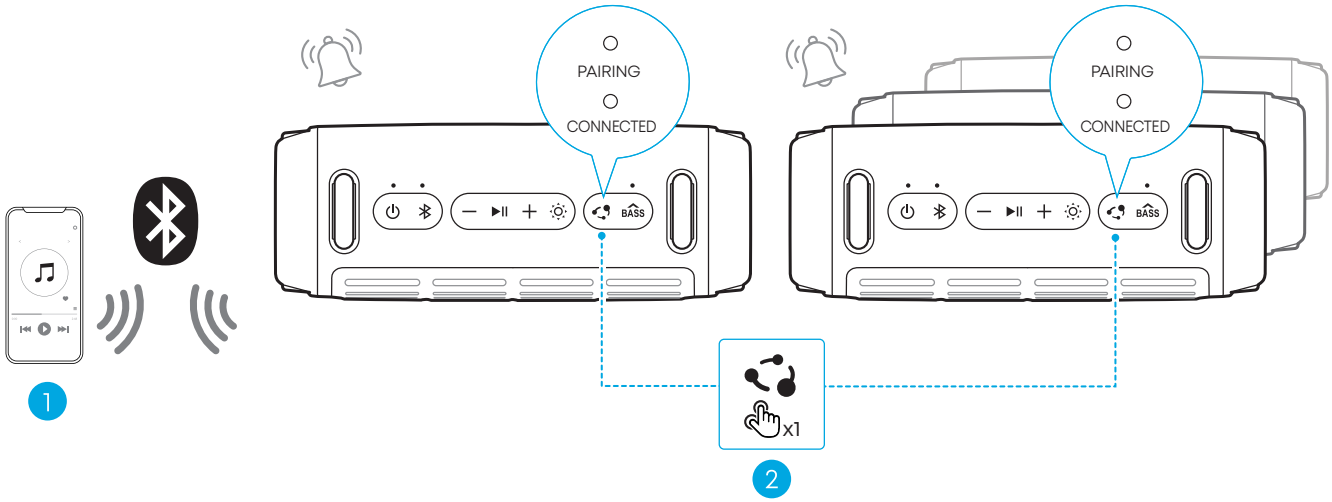

	Press	Enter / Exit PartyCast Pairing Mode
○	Steady White	PartyCast Pairing
○	Steady White	PartyCast Connected

- With the PartyCast feature, you can link up to 100 soundcore speakers at the same time.

Light Show

There are 6 dynamic light effects on both sides that move with the rhythm of the music, while 4 additional ambient light effects remain static to enhance the atmosphere. You can switch between different lighting effects to fit your mood or preference.

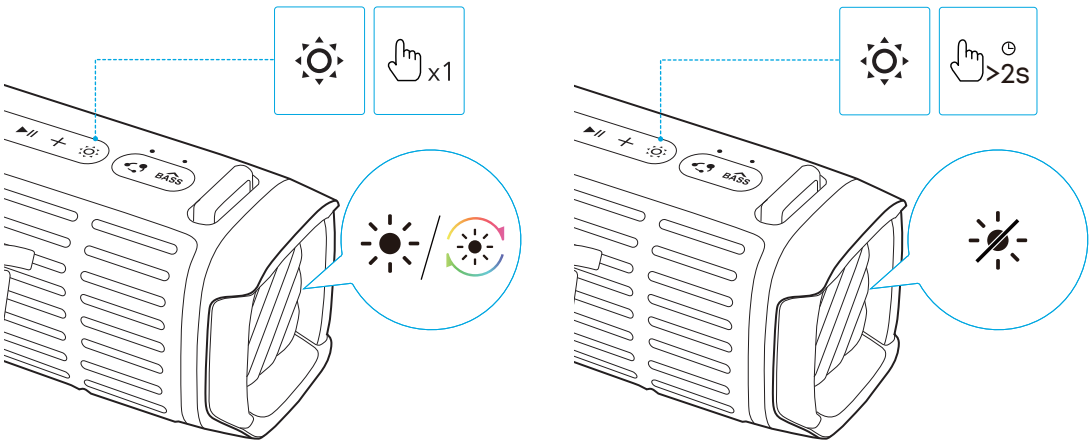

	Press Once or Press Again	Turn Light On / Switch Light Effects
	Press and Hold for 2 Seconds	Turn Off

Emergency Alarm

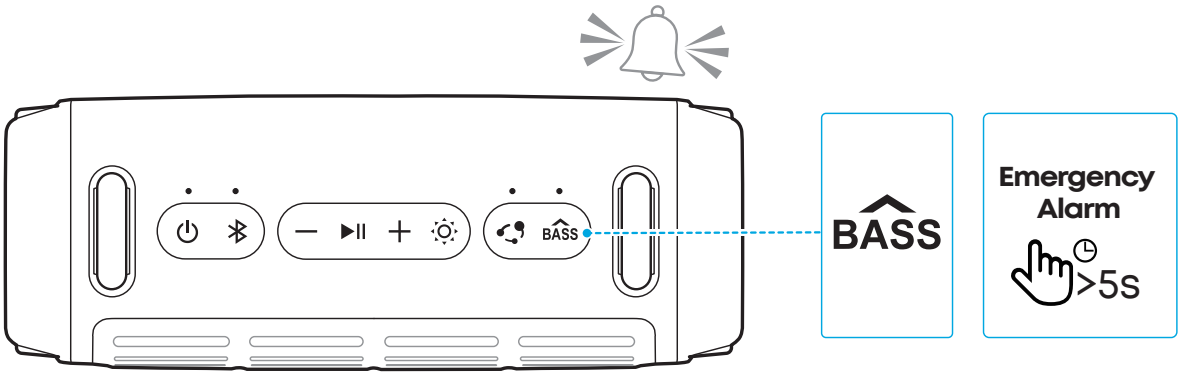

Press and hold the BassUp button for 5 seconds to activate the Emergency Alarm in case of danger. When the alarm is activated, you can press any button on the speaker once to turn it off.

- The sound of the Emergency Alarm is very loud and piercing. Do not use this feature unless there is an real emergency, as it may disturb others nearby.

Button Controls

	Press Once	Power On
	Press and Hold for 2 Seconds	Power Off
	Press	Enter Bluetooth Pairing Mode
	Press and Hold for 2 Seconds	Enter / Exit TWS Pairing Mode
+/−	Press	Volume Up / Down
	Press	Play / Pause
	Press Twice	Next Track
	Press Three Times	Previous Track
	Press Once or Press Again	Turn Light On / Switch Light Effects
	Press and Hold for 2 Seconds	Turn Off
	Press	Enter / Exit PartyCast Pairing Mode
BASS	Press	Enable / Disable BassUp Feature
	Press and Hold for 5 Seconds	Activate Emergency Alarm ***Press any button on the speaker to turn off the alarm.**

soundcore App

Download the soundcore app to enhance your experience.

GET IT ON Google Play

Google Play and the Google Play logo are trademarks of Google Inc.

Download on the App Store

Apple and the Apple logo are trademarks of Apple Inc.

Product information: Check the product name and software version, or read the user manual.

Firmware update: You will be informed once a new version of firmware is detected when you connect the speaker with the app.

Battery status: Indicates the remaining battery level of your speaker.

Volume control: Adjust the volume level via the app without pressing the buttons on the speaker.

EQ settings: There are various preset EQ settings you can choose from in the app to optimize your experience while enjoying different music genres.

- **soundcore Signature:** Standard EQ mode optimized for well-balanced sound.
- **Treble Boost:** High frequencies are enhanced.
- **Voice:** Voices stand out more clearly from other ambient sounds.
- **Balanced:** No enhancement for high-frequency and low-frequency sounds.

Buzz Clean: Activate Buzz Clean feature in the app, and the speaker will emit sound waves at specific frequencies to help shake off and clean out sand scattered on the speaker.

Voice Amplifier: Use the app's Voice Amplifier feature to speak directly through your phone, and your voice will be amplified and played through the speaker.

White Noise: Use the recommended white noise in the app to create a soothing atmosphere for relaxation or falling asleep.

Emergency Alarm: Quickly activates an alarm to draw attention in emergencies. You can also use the app to switch between different alarm sounds and adjust the duration of the alarm.

Set Auto-power off time: The speaker will automatically power off when time is up.

Voice prompt: Mute or restore the voice prompt while powering on/off.

Reset

Press and hold the Bluetooth button and volume up button simultaneously for at least 4 seconds to reset the speaker.

Specifications

Power Input	5V ⎓ 3A
Battery Capacity	2400mAh / 10.95V
Audio Output Power	50W
Speaker Driver	Woofer ×1 Tweeter ×1
Charging Time	< 4H
Playtime (varies by volume level and music content)	Up to 16 Hours
Waterproof and Dustproof Rating	IP68
Bluetooth Version	V5.3
Bluetooth Range	30m / 98ft

Hereby, Anker Innovations Limited declares that this device is in compliance with The Product Security and Telecommunications Infrastructure (Security Requirements for Relevant Connectable Products) Regulations 2023. For the Statement of Compliance, visit the website: https://uk.soundcore.com/pages/psti-related.

Note: The 'x' of SN Code: xxxxxxxxxxxxxxxx is a variable, see below table.

Variable 'x'	Range of variable	Content
Seventh	0-9 or A-F	Denotes the hardware version which is not effected on the safety compliance.
Eighth	8,9,A,B,C...	Denotes the year, 8 means 2018, 9 means 2019, A means 2020, B means 2021, C means 2022, and so on.
Ninth and tenth	01,02,03...	Denotes weeks, 01 means the first week in this year, 02 means the secondary week in this year, and so on.
Eleventh	1-7	Denotes date, 1 means Monday, 2 means Tuesday..., 7 means Sunday and so on.
The last five	00001-99999	Denotes serial No.